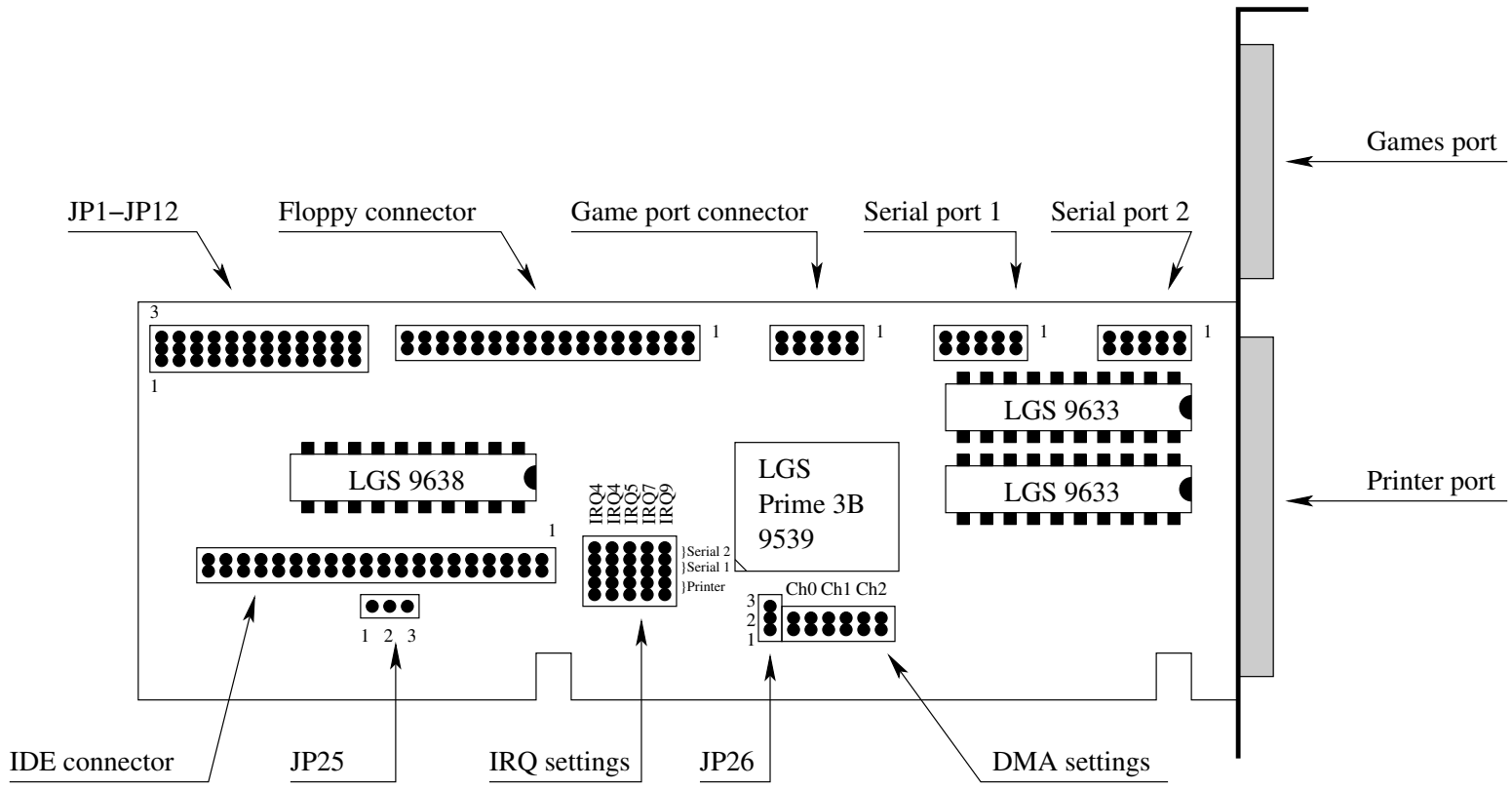Kentech Computer MultiIO card, IDEPLUS v4